DDS-225 DUAL DRUM SANDER

DDS-225……1791290T…….3~400V, 50Hz

PARTS LIST

TOOL FRANCE SARL
9 Rue des Pyrénées, 91090 LISSES, France
www.jettools.com

P-1791290T 2019-01

DDS-225 Drum Assembly

Index No.	Part No.	Description	Size	Qty.
1	DDS225-101A	Rear Drum		1
2	DDS225-102A	Abrasive Fastener-Right		2
3	DDS225-103A	Abrasive Fastener-Left		2
4	DDS225-104	Spring		2
5	DDS225-105	Locking Wedge		4
6	DDS225-106	Abrasive (80 Grit)		1
	DDS225-106A	Abrasive (100 Grit)		1
7	DDS225-107	Support Bracket		2
8	DDS225-108	Pulley		2
9	DDS225-109	Tension Roller		3
10	DDS225-110	Bushing		6
11	DDS225-111	Spring		6
12	DDS225-112	Bracket		6
13	DDS225-113	Bearing Assembly	UCFL205	4
14	VB-B68	Belt		2
15	DDS225-115	Key	8 x 7 x 50	2
16	DDS225-116	Adjusting Bushing		6
17	TS-0561031	Hex Nut	3/8-16	2
18	DDS225-118	Hex Cap Screw	5/16-18 x 5/8	12
19	TS-0720081	Lock Washer	5/16	12
20	TS-0060071	Hex Cap Screw	3/8-16 x 1-1/4	8
21	DDS225-121	Hex Cap Screw	1/2-13 x 1-1/2	4
22	TS-0720111	Lock Washer	1/2	8
23	DDS225-123	Hex Cap Screw	3/8-16 x 1-3/4	4
24	TS-0720091	Lock Washer	3/8	8
25	TS-1550071	Flat Washer	M10	4
26	TS-0207061	Socket Head Cap Screw	1/4-20 x 1	4
27	DDS225-127	Socket Set Screw	5/16-18 x 1/2	4
28	DDS225-128	Hex Cap Screw	3/8-16 x 3/4	4
29	TS-0060051	Hex Cap Screw	3/8-16 x 1	2
30	TS-0208021	Socket Head Cap Screw	5/16-18 x 1/2	4
31	TS-0270051	Socket Set Screw	5/16-18 x 1/2	2
32	DDS225-132	Spring		2
33	DDS225-133	Steel Ball	∅1/4	2
34	DDS225-134	Socket Set Screw	1/4-20 x 1/4	4
35	DDS225-135	Adjusting Knob		2
36	DDS225-136	Lead Screw		2
37	TS-0207041	Socket Head Cap Screw	1/4-20 x 3/4	4
38	TS-0680061	Flat Washer	1/2	4
39	TS-0720071	Lock Washer	1/4	4
40	DDS225-140	Top Cover-Right		1
41	DDS225-141	Collar		2
42	DDS225-142	Slide		2
43	DDS225-143	Locking Lever		2
44	DDS225-144	Slide Bracket-Right		1
45	TS-0561011	Hex Nut	1/4-20	4
46	TS-0267091	Socket Set Screw	1/4-20 x 1	4
47	DDS225-147	Gib-Right		1
48	DDS225-148	Top Cover-Left		1

DDS-225 Drum Assembly

Index No.	Part No.	Description	Size	Qty.
49	TS-1541041	Hex Nylon Lock Nut	M10	6
50	DDS225-150	Adjusting Screw		6
51	DDS225-151	Hex Nut	M22 x 1.5P x 5T	6
52	DDS225-152	Slide Bracket-Left		1
53	DDS225-153	Gib-Left		1
54	DDS225-154A	Front Drum		1
55	TS-1521021	Socket Set Screw	M4 x 10L	4
56	DDS225-156	Hex Cap Screw	1/2-13x 1-1/4	4
57	TS-0720091	Lock Washer	3/8	8
58	DDS225-158	Roll Pin	∅2 x 8mm	2
59	DDS225-159	Pulley Guard		1
60	DDS225-160	Bracket		2
61	DDS225-161	Flat Washer	1/4”	4
62	DDS225-162	Screw	1/4”-20 x 3/8	6
	DDS225-LSBA	Left Slide Bracket Assembly (index # 31-37 ,39, 41-43, 45-46, 48,52,53, 55,58)		1
	DDS225-RSBA	Right Slide Bracket Assembly (index #31-37 ,39-47, 55,58)		1

DDS-225 Drum Assembly

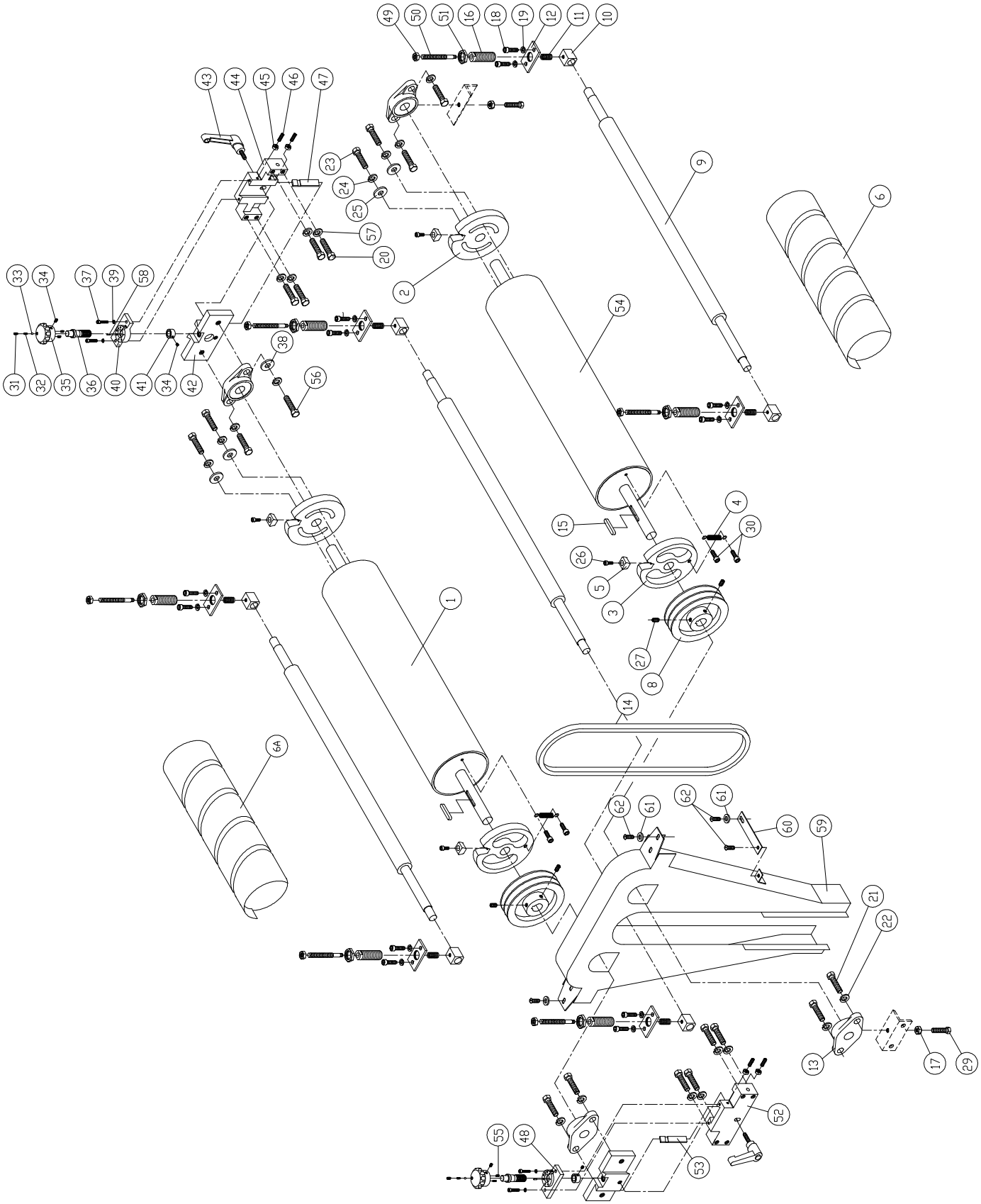

DDS-225 Conveyor Assembly

Index No.	Part No.	Description	Size	Qty.
1	DDS225-201	Table		1
2	DDS225-202	Support Bracket, Left-Front		1
3	DDS225-203	Support Bracket, Right-Front		1
4	DDS225-204	Support Bracket, Left-Rear		1
5	DDS225-205	Support Bracket, Right-Rear		1
6	DDS225-206B	Leadscrew Holder, Right-Front		1
7	DDS225-207B	Leadscrew Holder, Left-Front and Right-Rear		2
8	DDS225-208	Rod		1
9	DDS225-209	Front Roller		1
10	DDS225-210	Front Support Plate		1
11	DDS225-211	Collar		2
12	DDS225-212	Adjusting Knob		2
13	DDS225-213	Rear Roller		1
14	DDS225-214	Rear Support Plate		1
15	DDS225-215A	Drive Leadscrew		1
16	DDS225-216A	Driven Leadscrew		3
17	DDS225-217	Sprocket		4
18	DDS225-218	Support Bracket		8
19	DDS225-219	Guide Plate		2
20	DDS225-220	Post		1
21	DDS225-221	Handle		1
22	DDS225-222	Pointer		1
23	DDS225-223	Collar		2
24	DDS225-224	Bolt		1
25	BB-6203ZZ	Ball Bearing	6203ZZ	4
26	DDS225-226	Thrust Bearing		4
27	DDS225-227	Roll Pin	∅6 x 25mm	1
28	DDS225-228	Chain		1
29	TS-081F022	Phillips Pan Head Machine Screw	1/4-20 x 3/8	1
30	TS-0050011	Hex Cap Screw	1/4-20 x 1/2	8
31	TS-0207111	Socket Head Cap Screw	1/4-20 x 2-1/4	16
32	TS-0720071	Lock Washer	1/4	16
33	DDS225-233	Hex Nut	7/8-9	4
34	DDS225-234	Key	5 x 5 x 18mm	4
35	DDS225-235	Socket Head Cap Screw	5/16-18 x 3/4	16
36	TS-0720081	Lock Washer	5/16	22
39	TS-1550061	Flat Washer	M8	16
40	DDS225-240	Bushing		1
41	DDS225-241	Conveyor		1
42	TS-0561031	Hex Nut	3/8-16	1
43	DDS225-243	Front Cover		1
44	DDS225-244	Rear Cover		1
45	DDS225-245B	Threaded Bushing		4
46	DDS225-246	Handwheel		1
47	DDS225-247	Socket Set Screw	5/16-18 x 1/2	2
48	DDS225-248B	Leadscrew Holder, Left-Rear		1
49	TS-0208041	Socket Head Cap Screw	5/16-18 x 3/4	6
50	TS-0680031	Flat Washer	5/16	12

DDS-225 Conveyor Assembly

Index No.	Part No.	Description	Size	Qty.
51	TS-0720081	Lock Washer	5/16	6
52	TS-0640081	Hex Nut	5/16-18	6
53	TS-0208021	Socket Head Cap Screw	5/16-18 x 1/2	6
54	DDS225-254	Hex Nut	1/4-20	8
55	TS-0050081	Hex Head Screw	1/4-20 x1-3/4	8
56	DDS225-256	Shield		1
57	TS-0680021	Flat Washer	1/4	10
58	DDS225-258	Screw	1/4-20 x1/4	2
59	DDS237-259	Upper Bracket		4
60	DDS237-260	Boot	1/4-20 x1/4	4
61	TS-081C022	Screw	3/16-24x3/8	8
62	TS-0680011	Flat Washer	3/16	8
63	DDS237-257	lower Bracket		4
65	DDS225-336	Hex Head Screw	1/4-20 x3/8	8
66	DDS237-266	Special Washer		4
67	TS-0267051	Set Screw	1/4-20x3/4	6
68	DDS225-268	Special Nut		4
69	TS-0267021	Set Screw	1/4-20x1/4	2

DDS-225 Conveyor Assembly

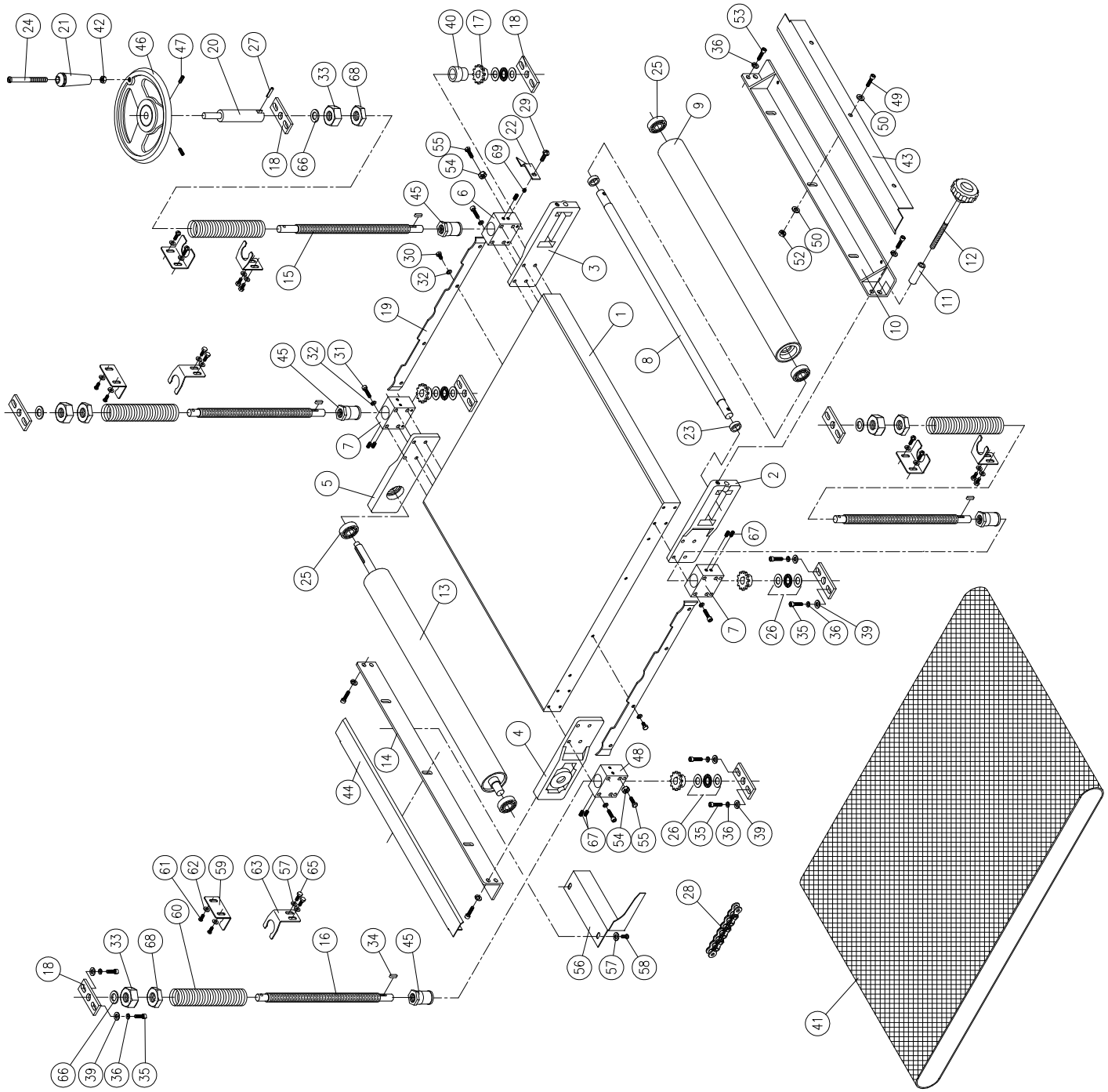

DDS-225 Motor & Cabinet Assembly

Index No.	Part No.	Description	Size	Qty.
1	DDS225-301A	Cabinet		1
2	DDS225-302	Support Bracket-Front		1
3	DDS225-303	Support Bracket-Rear		1
4	DDS225-304	Motor Plate		1
5	DDS225-305	Motor Pulley		1
6	DDS225-306AE	Motor	5HP, 3Ph, 400V	1
7	DDS225-307	Adjusting Screw		2
8	DDS225-308	Hinge		2
9	DDS225-309	Fixed Block		1
10	DDS225-310	Cylinder		1
11	DDS225-311	Flow Deflector		1
12	DDS225-312A	Top Cover		1
13	DDS225-313	Dust Chute		2
14	DDS225-314A	Roller Holder		1
15	DDS225-315	Idle Roller		1
16	DDS225-316	Switch Bracket		1
17	DDS225-317	Direction Label		1
18	DDS225-318E	Scale		1
19	DDS225-319A	Spacer		1
20	DDS225-320	Right Door Latch		2
	DDS225-320A	Left Door Latch		1
21	DDS225-321	Handle		1
22	DDS225-322AE	Magnetic Switch		1
	DDS225-322AEC	Contactor		1
	DDS225-322AEO	Overload		1
23	DDS225-323AE	Power Cord		1
24	DDS225-324AE	Strain Relief		5
25	DDS225-325	Key	5 x 5 x55 mm	1
26	DDS225-326	Screw	3/16-24 x 1/2	18
27	TS-0720051	Lock Washer	#10	2
28	DDS225-328	Socket Head Cap Screw	3/8-16 x 3/4	6
29	TS-0720091	Lock Washer	3/8	10
30	TS-1550071	Flat Washer	M10	4
31	DDS225-313	Socket Head Cap Screw	M8 x25	1
32	TS-0207021	Socket Head Cap Screw	1/4-20 x 1/2	1
33	TS-0720071	Lock Washer	1/4	21
34	DDS225-334	Shoulder Screw	M8 X1.25P X11	1
35	DDS225-335	Hex Nylon Lock Nut	M8	2
36	DDS225-336	Hex Head Screw	1/4-20 X 1/2	6
37	TS-0680021	Flat Washer	1/4	16
38	TS-0050011	Hex Cap Screw	1/4-20 x 1/2	6
39	TS-0208041	Socket Head Cap Screw	5/16-18 x 3/4	2
40	TS-0561021	Hex Nut	5/16-18	3
41	DDS225-341	Socket Head Cap Screw	5/16-18 x 1	1
42	DDS225-342	Flat Washer	M8	1
43	DDS225-343	Socket Set Screw	5/16-18 x 1/2	2
44	TS-0561031	Hex Nut	3/8-16NC	10
45	DDS225-345	Hex Cap Screw	3/8-16NC x 1-1/2	4
46	DDS225-346	Shoulder Screw		1
47	TS-0208061	Hex Cap Screw	5/16-18 x 1	1
48	TS-081F032	Phillips Pan Head Machine Screw	1/4-20 x 1/2	4
50	DDS225-350	Label (Drum Setting Gauge)		2

DDS-225 Motor & Cabinet Assembly

Index No.	Part No.	Description	Size	Qty.
51	DDS225-351	Flat Washer	5/16	1
52	DDS225-352	Flat Washer	3/8	8
53	DDS225-353	Strain Relief		2
54	DDS225-354AE	Motor Cord		1
55	DDS225-355	Front Cover		1
56	TS-1550031	Flat Washer	3/16	26
58	DDS225-358	Screw	3/16-24 x 3/8	14
59	DDS225-359	Rear Cover		1
60	DDS225-360	Self Tapping Screw	1/4 x 1/2	2
61	TS-069204	Flat Washer	SAE #10	2
62	DDS225-362	Lock Piece		2
63	DDS225-363	Plastic Nut		2
64	DDS225-364	Lock Housing		2
65	DDS225-365	Lock Knob		2
66	DDS225-366	Scoket Head Cap Screw	1/4-20x 1/2	4
67	TS-0720071	Lock Washer	1/4	4
68	DDS225-368	Holder		2
69	DDS225-369	Plate		1
70	TS-1490111	Hex Cap Screw	M8 x 60	2
71	DDS225-371	Flat Washer	M8	4
72	DDS225-372	Spring		2
73	TS-1540061	Hex Nut	M8	2
74	TS-081F022	Phillips Pan Head Machine Screw	1/4-20 x 5/16	4
75	DDS225-375	Screw	3/16-24 x 1-1/4	2
76	DDS225-376	Limit Switch		1
77	DDS225-377	Cord Holder		2
78	DDS225-378AEA	Cord, Limit Switch		1
79	DDS225-379AE	Switch Cord, Mag Switch to Power Switch		1
81	DDS225-381AE	Switch Cover		1
82	DDS225-382AE	Power Switch		1
83	DDS225-383AE	Switch Bracket		1
84	DDS225-384	Top Cover Warning Label (Not Shown)		1
85	DDS225-385	JET Logo		1
86	DDS225-386	I.D. Label		1
87	TS-0720081	Lock Washer	5/16	1
88	DDS225-388	Table Warning Label (Not Shown)		2
89	DDS225-389	Plug for Power Cord		1
90	DDS225-390	Running Direction Label (Not Shown)		1
91	DDS225-391	Switch Lock		1
92	DDS225-392	Pad		4
93	DDS225-393	Cord, Limit Switch		1
94	TS-1540021	Hex Nut	M4	4
95	TS-1550021	Flat Washer	M4	6
96	DDS225-396	Screw	M4x12	4
97	DDS225-397	Safety Key Support Bracket		1
98	DDS225-398	Screw	M4x30	2
99	DDS225-399	Limit Switch		1
100	DDS225-3100	Strain Relief		2
	DDS225-SKWC	Safety Key w/Chain (including, #101, #102)		1
101	DDS225-3101	Safety Key		1
102	DDS225-3102	Chain		1
103	DDS225-3103	Strain Relief		1

DDS-225 Motor & Cabinet Assembly

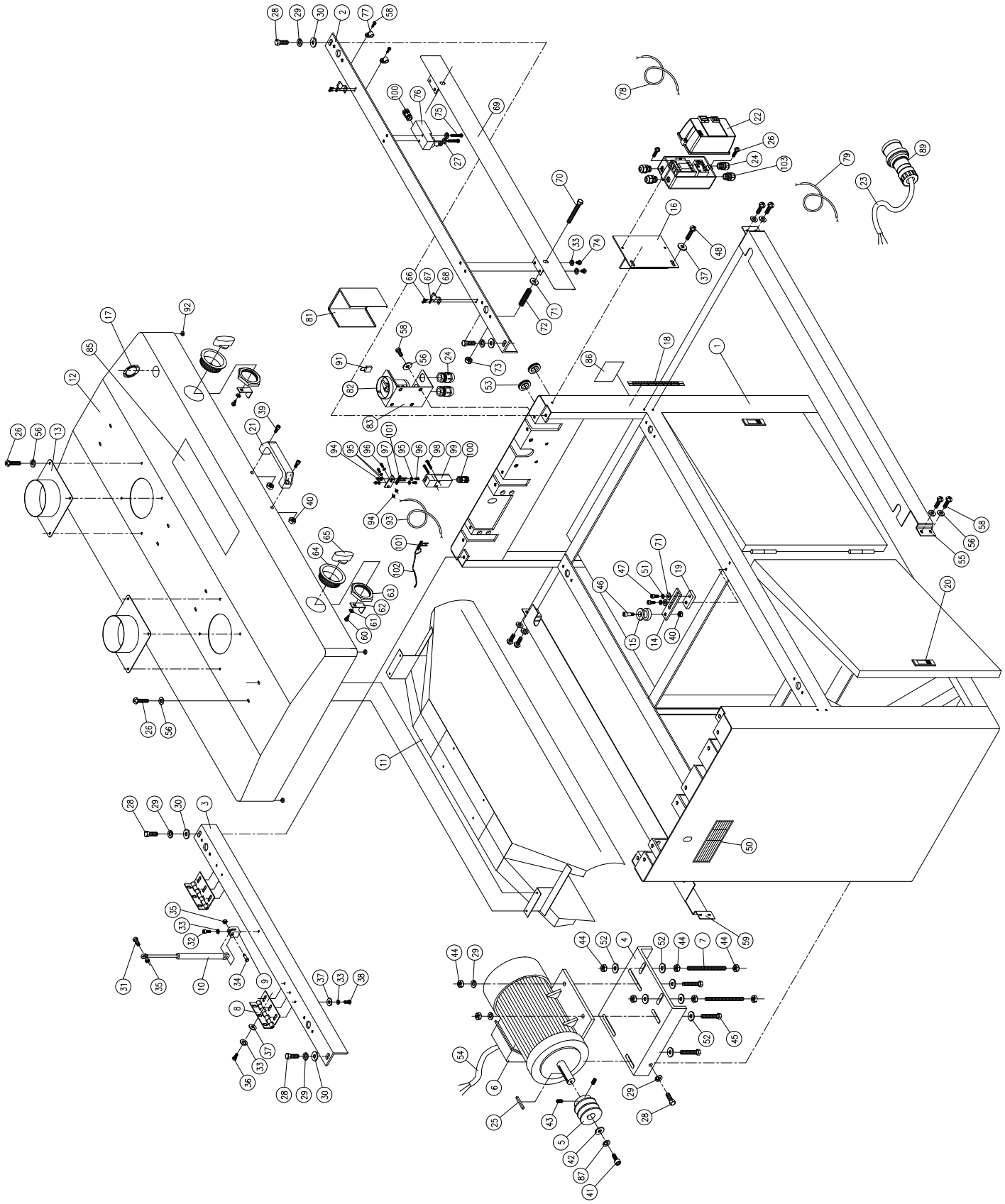

DDS-225 Gearbox Assembly

Index No.	Part No.	Description	Size	Qty.
	DDS225-GBA	Complete Gearbox Assembly w/Motor	400V	1
	DDS225-401CGA	Complete Gearbox Assembly wo/Motor		1
1	DDS225-401A	Gearbox Body		1
2	TS-0720071	Lock Washer	1/4	4
3	TS-0207071	Socket Head Cap Screw	1/4-20 x 1-1/4	4
4	DDS225-404	Drain Plug		1
5	BB-626VV	Ball Bearing		2
6	DDS225-406	Gear	66T	1
7	DDS225-407	Key	4 x 4 x 8	1
8	DDS225-408	Pinion		1
9	BB-6000VV	Ball Bearing	6000VV	1
10	DDS225-410	C-Ring		1
11	DDS225-411	Gear	70T	1
12	DDS225-412	Gear	57T	1
13	DDS225-413	Shaft		1
14	BB-6002VV	Ball Bearing	6002VV	2
15	DDS225-415	Key	5 x 5 x 20	1
16	DDS225-416	Shaft		1
17	DDS225-417	Cover		1
18	TS-1503041	Socket Head Cap Screw	M6 x 16	8
19	DDS225-419	Key	5 x 5 x 30	1
20	DDS225-420	Collar		1
21	DDS225-421	Oil Plug		1
22	DDS225-422	Handle		1
23	BB-6006VV	Ball Bearing		1
27	DDS225-427	Block		1
29	DDS225-429A	Gear Assembly	64T / 77T	1
30	DDS225-430	Key	6 x 6 x 50	1
31	DDS225-431AE	Cable		1
32	DDS225-432AE	Motor (Not available separately)	1/4HP, 3PH, 400V	1
33	DDS225-433	Gasket		2
34	DDS225-434	Steel Ball		1
35	DDS225-435	Spring		1
36	TS-1523011	Socket Set Screw	M6 x 6	1
37	DDS225-234AE	Strain Relief		1
	DDS225-GG	Gearbox Gasket (not shown)		1
		Gearbox Oil	SAE90	0.7Liter

* NOTE: change gearbox oil every 2,500 operating hours (gearbox oil, SAE90, 0.7 liter)

DDS-225 Gearbox Assembly

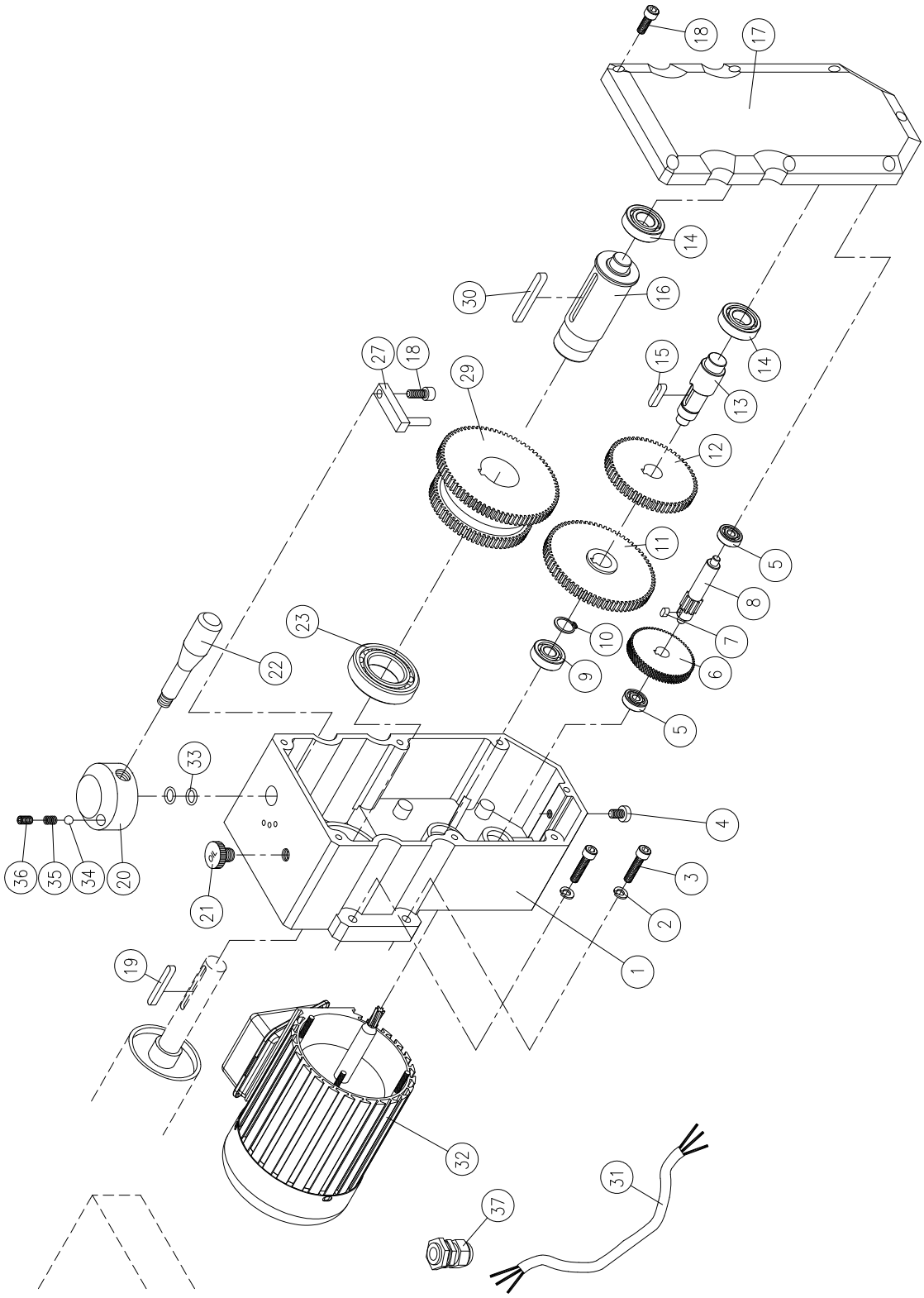

DDS-225 DRO Assembly

Index No.	Part No.	Description	Size	Qty.
.....	DDS225-DROA	Digital Readout Assembly (Includes index #1 ~ #10)		1
1	TS-0680011	Flat Washer	3/16	4
2	DDS225-502	Screw	3/16-24x5/16	4
3	15S-314	Digital Readout		1
4	DDS225-504	Flat Head Machined Screw	M3x.05Px5	2
5	DDS225-505A	Bracket		1
6	TS-0680021	Flat Washer	1/4	2
7	TS-0207021	Socket Head Cap Scre	1/4-20x1/2	2
8	15S-600	Battery	1.5 Volt	1
9	DDS225-509	Lower Bracket		1
10	DDS225-510	Upper Bracket		1

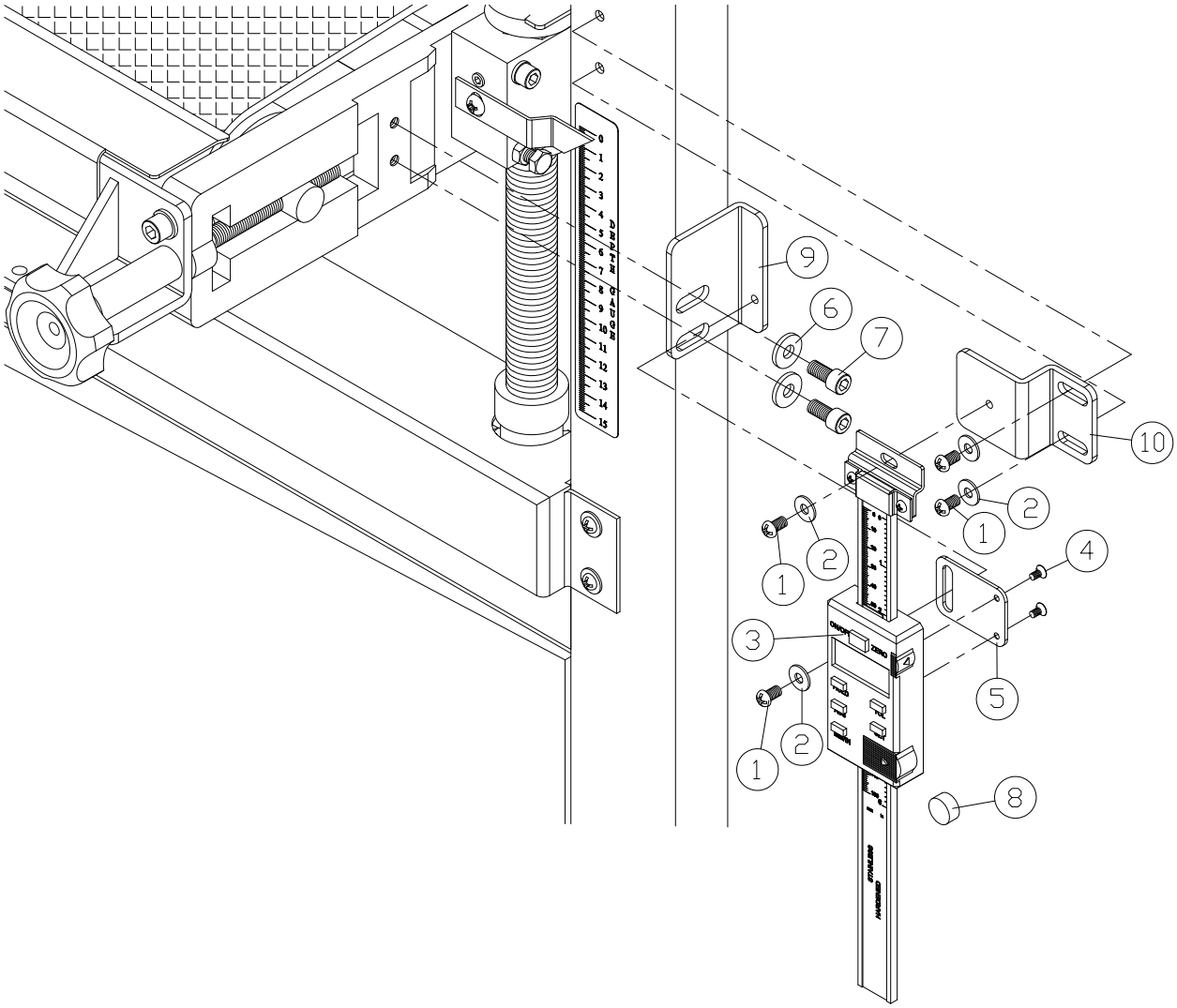

DDS-225…….1791290T…….3~400V, 50Hz

	colour of strands	Litzenfarben	couleur des cordons
BK	black	schwarz	noir
WH	white	weiß	blanc
BU	blue	blau	bleu
YE	yellow	gelb	jaune
RD	red	rot	rouge
BN	brown	braun	brun
GY	grey	grau	gris
GNYE	green-yellow	grün-gelb	vert-jaune
OG	orange	orange	orange
VT	violet	violett	violet
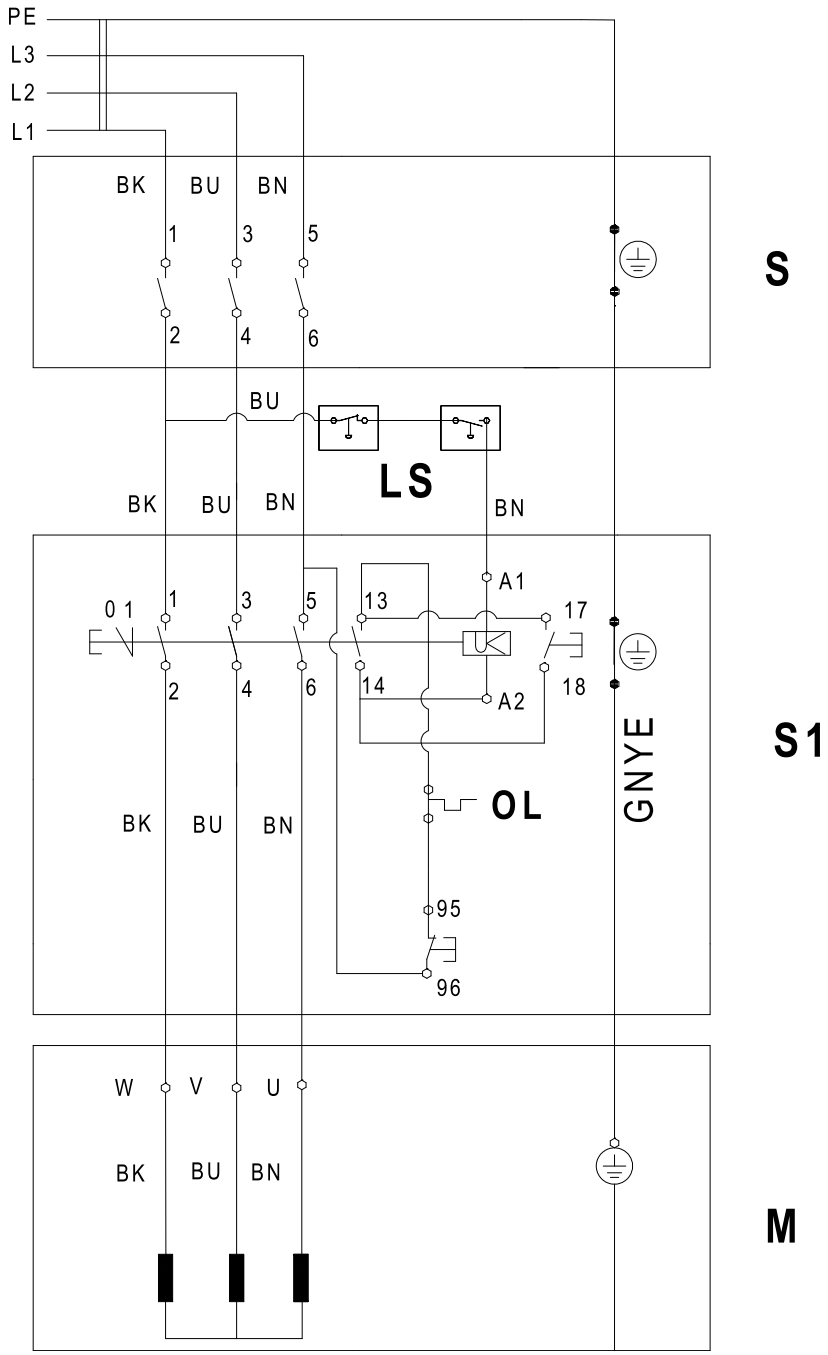
	meaning of symbol	Bedeutung der Zeichen	interprétation
M	motor	Motor	moteur
S	switch	Schalter	interrupteur
C	condenser	Kondensator	condensateur
E	electronic unit	Elektronik Einheit	unité électronique
F	fuse	Sicherung	fusible
RS	reversing switch	Drehrichtungsschalter	commu. droite/gauche
CS	centrifugal switch	Fliehkraftschalter	déclencheur centrifuge
OL	overload cut-off	Überlastschutzschalter	déclencheur surcharge
LS	limit switch	Positionsendschalter	micro