HBS-1321VS Metal Working Bandsaw

HBS-1321VS-T…414471T…3~400V, 50Hz

PARTS LIST
ERSATZTEILLISTE
LISTE DE PIECES

Walter Meier (Tool) AG
Tämperlistrasse 5
CH-8117 Fällanden
Switzerland
Phone +41 44 806 47 48
Fax +41 44 806 47 58
jetinfo.eu@waltermeier.com
www.jettools.com

P-414471T 2011-03

Bed and Base for the HBS-1321VS

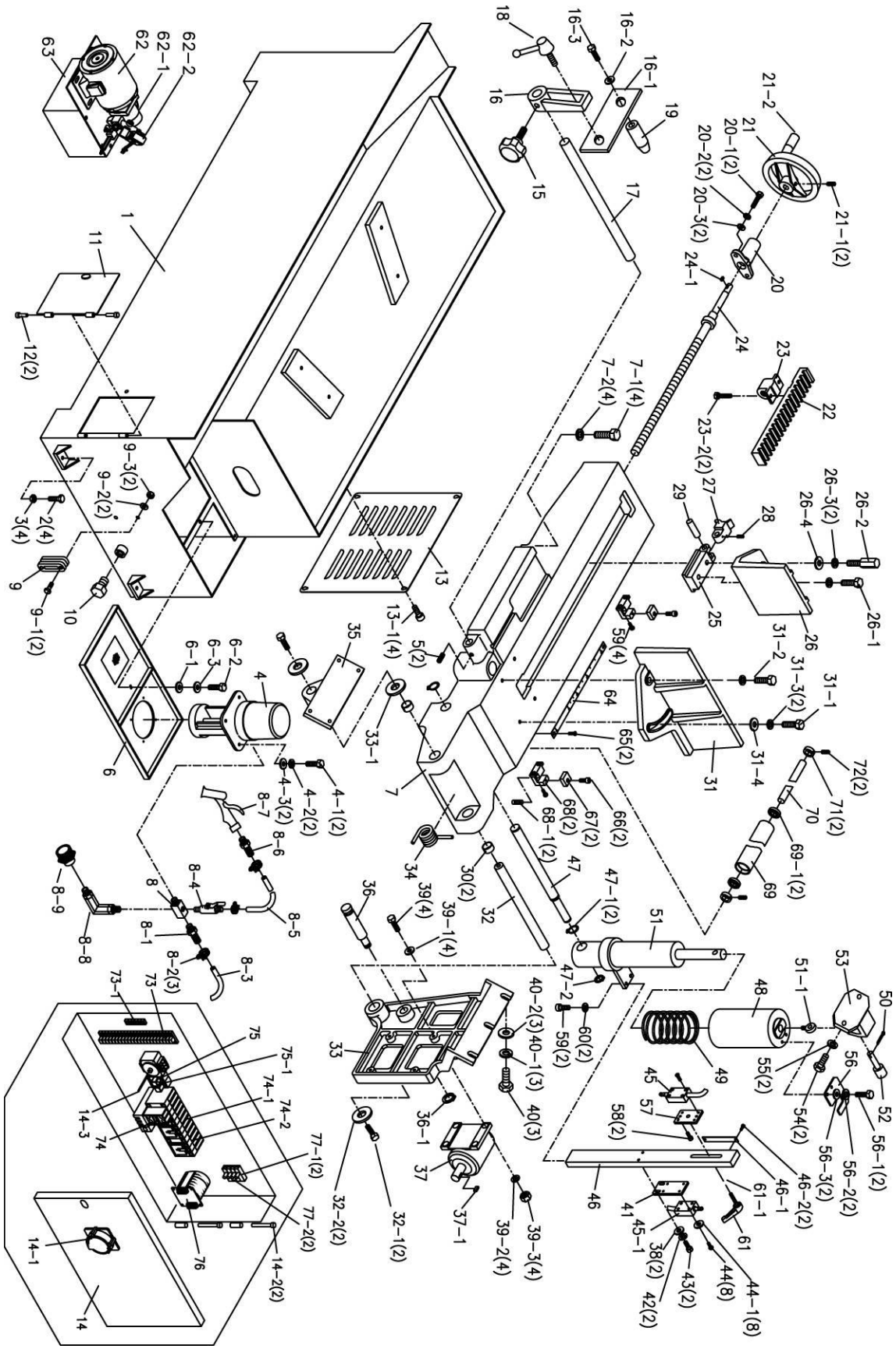

Bed and Base for the HBS-1321VS

Index No.	Part No.	Description	Size	Qty.
1	1321W-01	Base		1
2	TS-1492061	Hex Cap Bolt	M12x65	4
3	TS-1540081	Hex Nut	M12	4
4	1321W-04AE	Coolant Pump 400V	1/6HP, 3ph, 50Hz	1
4-1	1321W-04-1	Cross Point Screw	M6x16	2
4-2	1321W-04-2	Spring Washer	M6	2
4-3	1321W-04-3	Flat Washer	M6	2
5	TS-1524041	Set Screw	M8x16	2
6	1321W-06	Coolant Tank Cover		1
6-1	TS-1550041	Washer	M6	1
6-2	TS-1503031	Hex Socket Cap Screw	M6x12	1
6-3	TS-1551041	Spring Washer	M6	1
7	1321W-07	Bed		1
7-1	1321W-07-1	Hex Cap Bolt	M12x50	4
7-2	1321W-07-2	Spring Washer	M12	4
8	1321W-08	Connector		1
8-1	1321W-08-1	Hose Fitting		2
8-2	1321W-08-2	Hose Clamp		6
8-3	1321W-08-3	Hose	3/8”x1200	1
8-4	1321W-08-4	On/Off Valve		3
8-5	1321W-08-5	Hose	3/8”x2800	1
8-6	1321W-08-6	Hose Fitting		1
8-7	1321W-08-7	Coolant Nozzle		1
8-8	1321W-08-8	Connector		1
8-9	1321W-08-9	Fitting		1
9	1321W-09	Coolant Gauge		1
9-1	TS-1491041	Pan Head Screw	M10x30	2
9-2	TS-1550071	Washer	M10	2
9-3	TS-1540071	Hex Nut	M10	2
10	1321W-10	Drain Plug		1
11	1321W-11	Front Door w/Latch		1
12	1321W-12	Hinge Pin		2
13	1321W-13	Panel Cover		1
13-1	1321W-13-1	Round Cross Cap Screw	M6x8	4
14	1321W-14E	Electrical Panel Plate		1
14-1	1321W-14-1E	Knob		1
14-2	1321W-14-2E	Hinge Pin		2
14-3	1321W-14-3E	General Switcht		1
15	1321W-15	Lock Knob		1
16	1321W-16	Stop Bracket		1
16-1	1321W-16-1	Connecting Plate		1
16-2	1321W-16-2	Lock Washer		1
16-3	1321W-16-3	Hex Cap Bolt		1
17	1321W-17	Stop Rod		1
18	1321W-18	Lock Handle		1
19	1321W-19	Work Stop		1
20	1321W-20	Lead Screw Seat		1
20-1	TS-1504061	Hex Socket Cap Screw	M8x30	2
20-2	TS-1551081	Spring Washer	M8	2
20-3	TS-1550061	Washer	M8	2

Bed and Base for the HBS-1321VS

Index No.	Part No.	Description	Size	Qty.
21	1321W-21	Handle Wheel Assembly		1
21-1	TS-0270031	Set Screw	5/16"x3/8"	2
21-2	1321W-21-2	Handle		1
22	1321W-22	Rack		1
23	1321W-23	Lead Screw Seat		1
23-2	TS-1504041	Hex Socket Cap Screw	M8x20	2
24	1321W-24	Lead Screw		1
24-1	1321W-24-1	Key		1
25	1321W-25	Slide Bracket		1
26	1321W-26	Vise Jaw - Left		1
26-1	TS-1492041	Hex Cap Bolt	M12x40	1
26-2	1321W-26-2	Locking Bolt	M12x45	1
26-3	TS-1551081	Spring Washer	M12	2
26-4	TS-1550061	Washer	M12x35x5W	1
27	1321W-27	Rack Block		1
28	TS-1523021	Set Screw	M6x8	1
29	1321W-29	Pin		1
30	1321W-30	Needle Bearing	CB3020	2
31	1321W-31	Vise Jaw - Right		1
31-1	1321W-31-1	Hex Cap Bolt	M16x50	1
31-2	1321W-31-2	Hex Cap Bolt	M16x40	1
31-3	1321W-31-3	Spring Washer	M16	2
31-4	1321W-31-4	Washer	M16x35x5W	1
32	1321W-32	Pivot Shaft		1
32-1	TS-1492001	Hex Cap Bolt	M12x20	2
32-2	TS-1550081	Washer	M12	2
33	1321W-33	Pivot Bracket		1
33-1	1321W-33-1	Spacer		1
34	1321W-34	Spring		1
35	1321W-35	Support Bracket Seat		1
36	1321W-36	Pivot Support Shaft		1
36-1	1321W-36-1	C-Clip	S22	1
37	1321W-37AE	Motor 400V	3HP, 50Hz , 3Ph	1
37-1	1321W-37-1	Key	8x7x50	1
38	TS-1550041	Flat Washer	M6	2
39	1321W-39	Hex Cap Bolt	M10x55	4
39-1	TS-1550071	Flat Washer	M10	4
39-2	TS-1541071	Spring Washer	M10	4
39-3	TS-1540071	Hex Nut	M10	4
40	TS-1492051	Hex Cap Bolt	M12x50	3
40-1	TS-1551081	Spring Washer	M12	3
40-2	TS-1550081	Washer	M12	3
41	1321W-41	Switch Mounting Plate		1
42	TS-1551041	Spring Washer	M6	2
43	TS-1482021	Hex Cap Bolt	M6x12	2
44	1321W-44	Cross Point Screw	M5x35	8
44-1	1321W-44-1	Spring Washer	M5	8
45	1321W-45	Limit Switch-arm up (LS3)	5101	1
45-1	1321W-45-1	Roller Limit Switch-cut (LS2)	5102	1
46	1321W-46	Adjusting Bracket		1
46-1	1321W-46-1	Scale Plate		1
46-2	1321W-46-2	Rivet		2

Bed and Base for the HBS-1321VS

Index No.	Part No.	Description	Size	Qty.
47	1321W-47	Cylinder Support Rod		1
47-1	1321W-47-1	C-Clip	S32	2
47-2	1321W-47-2	C-Clip	S28	1
48	1321W-48	Cylinder Cover		1
49	1321W-49	Spring		1
50	1321W-50	Retaining Pin		1
51	1321W-51	Cylinder Assembly		1
51-1	1321W-51-1	Holder		1
51-2	1321W-51-2	Hydr. hose (not show)	1700mm, 3/8H	2
52	1321W-52	Cylinder Pin		1
53	1321W-53	Top Mounting Plate		1
54	TS-1492031	Hex Cap Bolt	M12x35	2
55	TS-1551081	Spring Washer	M12	2
56	1321W-56	Plate		1
56-1	TS-1482021	Hex Cap Bolt	M6x12	2
56-2	TS-1551041	Spring Washer	M6	2
56-3	TS-1550041	Flat Washer	M6	2
57	1321W-57	Limit Switch Mounting Plate		1
58	TS-1503011	Hex Socket Cap Screw	M6x8	2
59	TS-1504051	Hex Socket Cap Screw	M8x25	6
60	TS-1551081	Spring Washer	M8	2
61	1321W-61	Handle		1
61-1	TS-1550071	Washer	M10	1
62	1321W-62AE	Hydraulic Pump Motor	220V	1
62-1	1321W-62-1	Pump		1
62-2	1321W-62-2	Solenoid Valve		1
62-3	1321W-62-3	Hydraulic Fill Cap		1
63	1321W-HPCA	Hydraulic Pump Complete Assembly		1
64	1321W-64	Scale		1
65	1321W-65	Rivet		2
66	TS-1503031	Hex Socket Cap Screw	M6x12	2
67	1321W-67	Plate		2
68	1321W-68	Roller Seat		2
68-1	TS-1525021	Set Screw	M10x12	2
69	1321W-69	Support Roller		2
69-1	BB6004ZZ	Ball Bearing	6004ZZ	2
70	1321W-70	Rod		1
71	1321W-71	Knob		2
72	TS-1523021	Set Screw	M6x8	2
73	1321W-73E	Terminal Strip		1
73-1	1321W-14-4E	Grounding Plate		1
74	1321W-74	Magnetic Switch (w/Overload)		1
74-1	1321W-74-1	Magnetic Switch		1
74-2	1321W-74-2	Magnetic Switch		1
75	1321W-75	Relay		1
75-1	1321W-75-1	Relay		1
76	1321W-76E	Transformer		1
77	1321W-77	Fuse Case		1
77-1	1321W-77-1E	Fuse (2A)		2
77-2	1321W-77-2E	Fuse (3A)		2

Arm for the HBS-1321VS

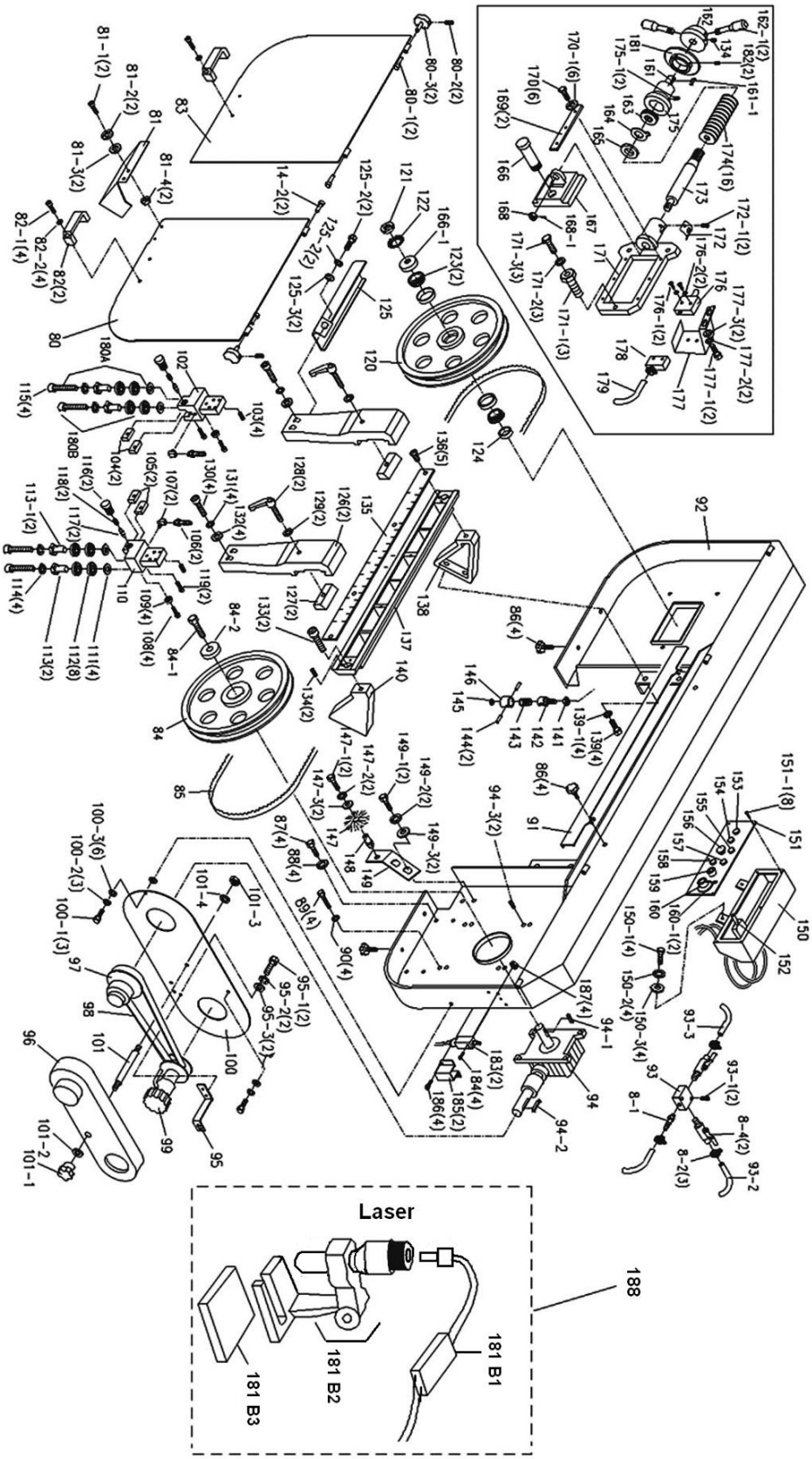

Arm for the HBS-1321VS

Index No.	Part No.	Description	Size	Qty.
8-1	1321W-08-1	Hose Fitting		2
8-2	1321W-08-2	Hose Clamp		6
8-4	1321W-08-4	On/Off Valve		3
14-2	1321W-14-2	Hinge Pin		2
80	1321W-80	Blade Wheel Cover - R		1
80-1	1321W-80-1E	Hinge Pin		2
80-2	1321W-80-2E	Set Screw	M6x8	2
80-3	1321W-80-3E	Eccentric Shaft		2
81	1321W-81	Brush Cover		1
81-1	TS-1482021	Hex Cap Bolt	M6x12	2
81-2	TS-1551041	Spring Washer	M6	2
81-3	TS-1550041	Flat Washer	M6	2
81-4	TS-1540041	Nut	M6	2
82	1321W-82	Handle		2
82-1	1321W-82-1	Cross Point Screw	M6x16	4
82-2	1321W-82-2	Washer	M6	4
83	1321W-83	Blade Wheel Cover - L		1
84	1321W-84	Drive Wheel		1
84-1	1321W-84-1	Hex Cap Bolt	M12x20	1
84-2	1321W-84-2	Washer	M12	1
85	1321W-85E	Saw Blade(HSS)	34x1.1x4100mm	1
86	1321W-86	Knob		8
87	TS-1491041	Hex Cap Bolt	M10x30	4
88	TS-1551071	Spring Washer	M10	4
89	TS-1492031	Hex Cap Bolt	M12x35	4
90	TS-1551081	Spring Washer	M12	4
91	1321W-91	Blade Guard		1
92	1321W-92	Blade Wheel Box Assembly		1
93	1321W-93	Connector		1
93-1	1321W-93-1	Hex Socket Cap Screw	M6x20	2
93-2	1321W-93-2	Hose		1
93-3	1321W-93-3	Hose		1
94	1321W-94	Gear Box Assembly		1
94-1	1321W-94-1	Key	12x8x32	1
94-2	1321W-94-2	Key	7x7x40	1
94-3	TS-1525041	Set Screw	M10x12	2
95	1321W-95	Plate		1
95-1	TS-1482021	Hex Cap Bolt	M6x12	2
95-2	TS-1551041	Spring Washer	M6	2
95-3	TS-1550041	Washer	M6	2
96	1321W-96	Pulley Cover		1
97	1321W-97	Input Pulley		1
98	1321W-98	Belt	1922V443	1
99	1321W-99	Output Pulley Assembly		1
100	1321W-100	Cover Plate		1
100-1	TS-1490021	Hex Cap Bolt	M8x16	4
100-2	TS-1551081	Spring Washer	M8	3
100-3	TS-1550061	Washer	M8	6
101	1321W-101	Shaft		1
101-1	1321W-101-1	Nut	5/16”	1
101-2	1321W-101-2	Washer	5/16”	1

Arm for the HBS-1321VS

Index No.	Part No.	Description	Size	Qty.
101-3	1321W-101-3	Nut	5/16”	1
101-4	1321W-101-4	Spring Washer	5/16”	1
102	1321W-102	Guide Bracket - L		1
103	TS-1524041	Set Screw	M8x16	4
104	1321W-104	Blade Guide Assembly-L		2
105	1321W-105	Blade Guide Assembly-R		2
106	1321W-106	Connector		2
107	1321W-107	Cu Connector		2
108	TS-1490051	Hex Socket Cap Screw	M8x30	4
109	BB608Z	Ball Bearing	608Z	4
110	1321W-110	Guide Bracket - R		1
111	TS-1550061	Flat Washer	M8	4
112	BB6201RS	Ball Bearing	6201RS	8
113	1321W-113	Sleeve		2
113-1	1321W-113-1	Eccentric Sleeve		2
114	TS-1551081	Spring Washer	M8	4
115	TS-1490081	Hex Socket Cap Screw	M8x45	4
116	1321W-116	Adjusting Knob		2
117	1321W-117	Small Shaft		2
118	1321W-118	Spring		2
119	1321W-119	Hex Socket Cap Screw	M16x12	2
120	1321W-120	Idle Blade Wheel		1
121	1321W-121	Jam Nut		1
122	1321W-122	Star Washer		1
123	1321W-123	Taper Roller Bearing	30206	2
124	1321W-124	Spacer		1
125	1321W-125	Blade Guard		1
125-1	TS-1482021	Hex Cap Bolt	M6x12	2
125-2	TS-1551041	Spring Washer	M6	2
125-3	TS-1550041	Washer	M6	2
126	1321W-126	Adjusting Bracket Mount		2
127	1321W-127	Lock Block		2
128	1321W-128	Handle		2
129	TS-1550071	Washer	M10	2
130	TS-1505051	Hex Socket Cap Screw	M10x40	4
131	TS-1551071	Spring Washer	M10	4
132	TS-1550071	Washer	M10	4
133	TS-1550081	Hex Socket Cap Screw	M12x25	2
134	TS-1524031	Set Screw	M8x10	5
135	1321W-135	Scale Plate		1
136	1321W-136	Cross Point Screw		4
137	1321W-137	Slide Bracket		1
138	1321W-138	Blade Bracket - L		1
139	TS-1492021	Hex Cap Bolt	M12x30	4
139-1	TS-1551081	Spring Washer	M12	4
140	1321W-140	Blade Bracket - R		1
141	1321W-141	Hex Nut	M12	1
142	1321W-142	Stop Support		1
143	1321W-143	Spring		1
144	1321W-144	Pin		2
145	1321W-145	Rubber Pad		1
146	1321W-146	Stop Block		1
147	1321W-147	Brass Wire Brush		1

Arm for the HBS-1321VS

Index No.	Part No.	Description	Size	Qty.
147-1...	TS-1482021	Hex Cap Bolt	M6x12	2
147-2...	TS-1551041	Spring Washer	M6	2
147-3...	TS-1550041	Washer	M6	2
148.....	1321W-148	Bushing		1
149.....	1321W-149	Brush Bracket		1
149-1...	TS-1482021	Hex Cap Bolt	M6x12	2
149-2...	TS-1551041	Spring Washer	M6	2
149-3...	TS-1550041	Washer	M6	2
150.....	1321W-150	Control Box		1
150-1...	TS-1482021	Hex Cap Bolt	M6x12	4
150-2...	TS-1551041	Spring Washer	M6	4
150-3...	TS-1550041	Washer	M6	4
151.....	1321W-151	Control Panel		1
151-1...	1321W-151-1	Cross Point Screw	M5x10	8
152.....	1321W-152	Downfeed Valve Assembly		1
153.....	1321W-153	Power Indicator Light		1
154.....	1321W-154	Start Button		1
155.....	1321W-155	Stop Button		1
156.....	1321W-156	Emergency Switch		1
157.....	1321W-157	Arm Up Switch		1
158.....	1321W-158	Arm Down Switch		1
159.....	1321W-159	On/Off Coolant Switch		1
160.....	1321W-160	Downfeed Control Knob		1
160-1...	TS-1523061	Set Screw	M6x20	2
161.....	1321W-161	Extension Bar		1
161-1...	1321W-161-1	Key		1
162.....	1321W-162	Handle Base		1
162-1...	1321W-162-1	Handle		2
163.....	1321W-163	Thrust Bearing	51106	1
164.....	1321W-164	Indicator Washer		1
165.....	1321W-165	Spacer		1
166.....	1321W-166	Blade Wheel Bracket Shaft		1
166-1...	1321W-166-1	Cover		1
167.....	1321W-167	Slide Bracket		1
168.....	1321W-168	Adjusting Nut		1
168-1...	TS-1523021	Set Screw	M6x8	1
169.....	1321W-169	Slide Plate		2
170.....	TS-1504041	Hex Socket Cap Screw	M8x20	6
170-1...	TS-1551061	Spring Washer	M8	6
171.....	1321W-171	Extension Bracket		1
171-1...	1321W-171-1	Sleeve	M20x35	3
171-2...	TS-1551081	Spring Washer	M12	3
171-3...	1321W-171-3	Hex Cap Bolt	M12x65	3
172.....	1321W-172	Blade Extension Scale		1
172-1...	1321W-172-1	Cross Point Screw	M5x10	2
173.....	1321W-173	Spring Support Shaft		1
174.....	1321W-174	Belleville Spring	W=2.5mm	16
175.....	1321W-175	Stop Flange		1
175-1...	1321W-175-1	Set Screw	M8x20	2
176.....	1321W-176	Limit Switch-blade break (LS4)	1307	1
176-1...	1321W-176-1	Cross Point Screw	5/32”x1”	2
176-2...	TS-1550021	Washer	M4	2
176-3...	TS-1540021	Nut (not shown)	M4	2

Arm for the HBS-1321VS

Index No.	Part No.	Description	Size	Qty.
177	1321W-177	Cover		1
177-1	TS-1482021	Hex Cap Bolt	M6x12	2
177-2	TS-1551041	Spring Washer	M6	2
177-3	TS-1550041	Washer	M6	2
178	1321W-178	Relief Bushing		2
178-1	1321W-178-1	Cover		1
179	1321W-179	Electrical Wire	0.5/2Cx430cm	1
180A	1321W-180A	Eccentric Sleeve Assembly (#111,112,113-1,114,115)		2
180B	1321W-180B	Sleeve Assembly (#111,112,113,114,115)		2
181	1321W-181E	Flexible Set Ring		1
182	1321W-182E	Set Screw	M8x10	2
183	1321W-183E	Limit Switch-for wheel doors (LS1)		2
184	1321W-184E	Round Head Screw	5/32x32	4
185	1321W-185E	Limit Switch Guard		2
186	1321W-186E	Round Head Screw	5/32x1-1/2	4
187	1321W-187E	Nut	5/32	4
188	1321W-181B	Laser Guide Assembly (B1, B2, B3)		1
	1321W-181B1	Laser Guide with Bracket		1
	1321W-181B2	Transformer with Power Cord		1
	1321W-181B3	Bracket for Laser Guide		1

Gear Reduce Box Assembly for the HBS-1321VS

Index No.	Part No.	Description	Size	Qty.
1	1321W-94-01	Output Shaft Cover		1
2	TS-1482031	Hex Socket Cap Screw	M6x16	4
3	1321W-94-03	Key	12x8x35	1
4	1321W-94-04	Output Shaft		1
5	1321W-94-05	Oil Seal	TC50X70X10	1
6	1321W-94-06	Taper Roller Bearing	30210	2
7	1321W-94-07	Worm	1/40 rate	1
8	1321W-94-08	Key	16x10x70	1
9	1321W-94-09	Key	7x7x50	1
10	1321W-94-10	Oil Seal	SC30x62x7	1
11	1321W-94-11	C-Clip	R62	1
12	1321W-94-12	Taper Roller Bearing	30206	2
13	1321W-94-13	Drain Plug	1/4”PT	1
14	1321W-94-14	Gear Box		1
15	1321W-94-15	Worm Shaft		1
16	1321W-94-16	Gasket		1
17	1321W-94-17	Input Shaft Cover		1
18	TS-1504041	Hex Socket Cap Screw	M8x20	4
19	1321W-94-19	Clear Oil Glass	25	1
20	1321W-94-20	Fill Oil Plug	3/8”PT	1
21	TS-1551071	Spring Washer	M10	6
22	TS-1491041	Hex Cap Bolt	M10x30	6
23	1321W-94-23	Worm Shaft Cover		1

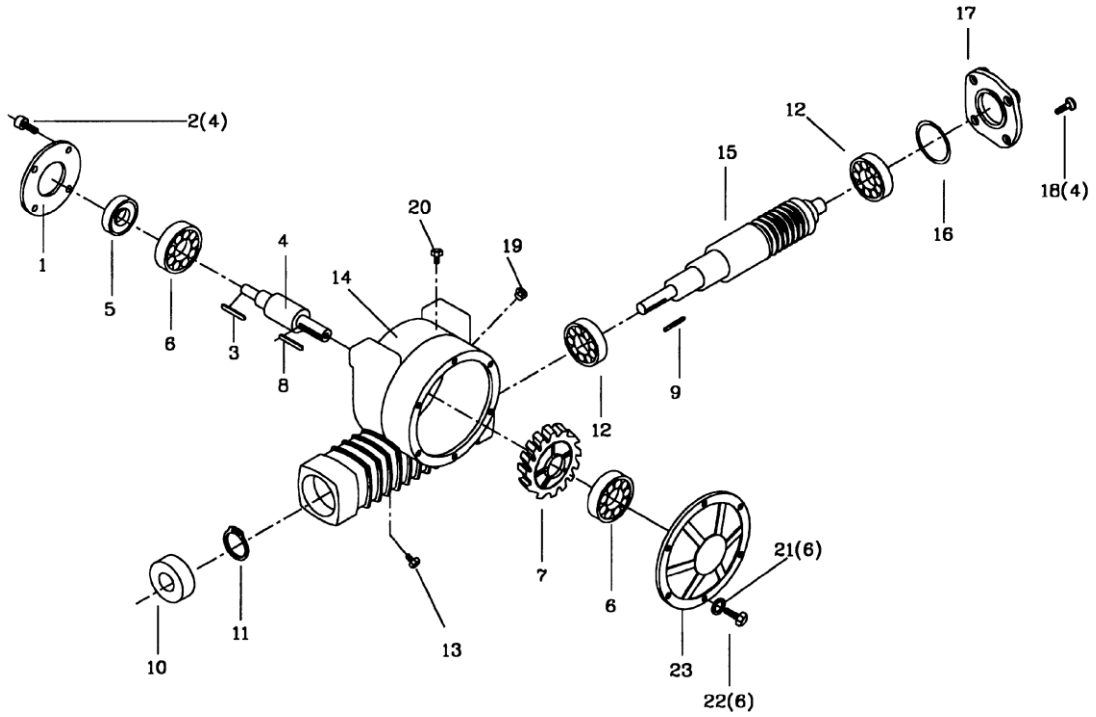

HBS-1321VS-T…….414471T…...3~400V 50Hz

	colour of strands	Litzenfarben	couleur des cordons
BK	black	schwarz	noir
WH	white	weiß	blanc
BU	blue	blau	bleu
YE	yellow	gelb	jaune
RD	red	rot	rouge
BN	brown	braun	brun
GY	grey	grau	gris
GNYE	green-yellow	grün-gelb	vert-jaune
OG	orange	orange	orange
VT	violet	violett	violet
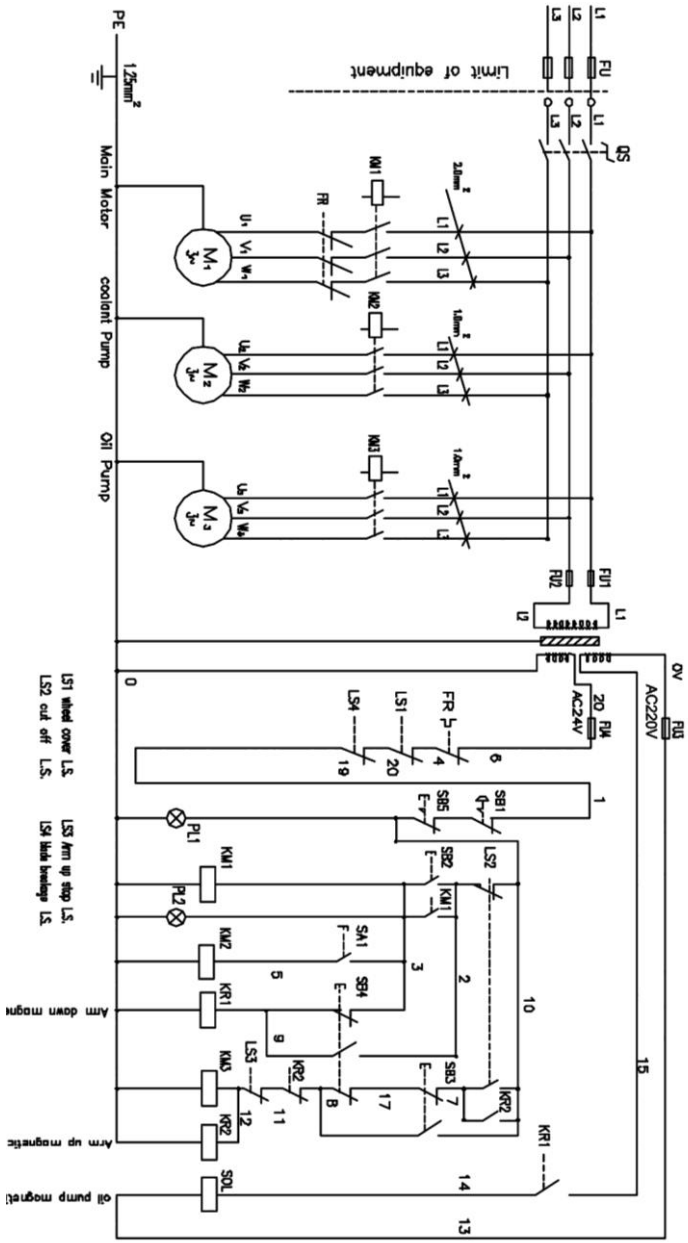
	meaning of symbol	Bedeutung der Zeichen	interprétation
M1	Main motor	Hauptmotor	moteur
M2	Coolant pump	Kühlmittelpumpe	Pompe de liquide réfrigérant
M3	Oil pump	Hydraulikpumpe	Pompe d'huile
Fu	fuse	Sicherung	fusible
KM1	Saw motor contact	Hauptmotor Schütz	Contact de moteur de scie
KM2	Coolant pump contact	Kühlmittelpumpe Schütz	Contact de pompe de liquide réfrigérant
KM3	Oil pump contact	Hydraulikpumpe Schütz	Contact de pompe d'huile
FR	overload cut-off	Überlastschutzschalter	déclencheur surcharge
TR	Transformer	Transformator	Transformateur
PL1	Indicator lamp	Anzeigelampe	Voyant
PL2	Start on lamp	Start-Lampe	Commencez sur la lampe
LS1	Cover limit switch	Räderdeckel Endschalter	Commutateur de limite de couverture
LS2	Cut-off and saw arm up switch	SchnittendeEndschalter	Coupure et bras de scie vers le haut de commutateur
LS3	Saw arm up off switch	Sägearm oben Endschalter	Bras de scie vers le haut outre de commutateur
LS4	Blade breakage switch	Blattbruch Endschalter	Commutateur de rupture de lame
SB1	Emergency switch	Not-Aus Taste	Bras de scie vers le haut de bouton
SB3	Saw arm up button	Sägearm Anhub-Taste	Bras de scie vers le haut de bouton
SB4	Saw arm down button	Sägearm Absenk-Taste	Le bras de scie se boutonnent vers le bas
SB5	Stop button	STOP-Taste	La touche "ARRÊT"
SA1	Pump switch	Kühlmittelpumpe Schalter	Commutateur de pompe
QS	Door-lock switch	E-Schrank Türschloßschalter	Commutateur de verrou de porte
KR1	Contact Relay(Down)	Sägearm-Absenk-Relais	Relais de contact (vers le bas)
KR2	Contact Relay(up)	Sägearm-Anhub-Relais	Relais de contact (vers le haut)